GLAZING SYSTEMS FOR FULLY BEDDED FRAMES

JUNE 2009

THE B5 MOISTURE VAPOUR PERMEABLE (MVP) GLAZING SYSTEM

DESCRIPTION

The B5 Moisture Vapour Permeable (MVP) Glazing System is suitable for installing most types of single glass and double glazed units into fully bedded timber window and door frames. It can also be used for reglazing of existing timber frames with double glazed units (Please see Glazing System for Reglazing Double Glazed Units). Although its use is now considered to be in decline as a result of a move in favour of more durable materials, it still maintains a degree of popularity with site glaziers. Its ability to provide the degree of protection against the ingress of moisture required for reasonable unit performance is heavily dependent however on close adherence to the procedures detailed in the Method Statement. It is not recommended for factory glazing processes. The System comprises of Timber Sealer, Butyl 66 Glazing Compound and Silfix® U9 Neutral Cure Silicone Sealant. 3mm distance pieces are also required to ensure adequate thickness of glazing compound between the unit and rebate/beads. For internal beads contact Technical Services.

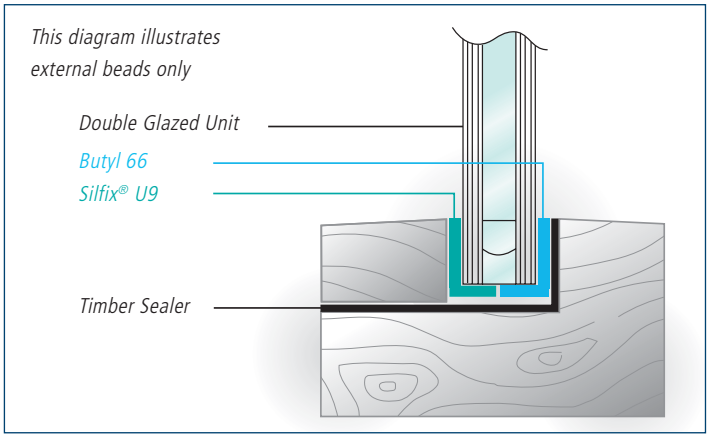

Note: Silfix® U9 may also be required to comply with BS8000: Part 7 Clause 2.2.1(e) sealing of frame section junctions and fabrication holes, prior to glazing.

EXPOSURE/WEATHERTIGHTNESS RATING

- Suitable for a 2300 Pa 'High' Exposure Rating

INDUSTRY STANDARDS COMPLIANCE

- BS 8000 Reference 3.4.1.4
- GGF Manual Section 4.2 Reference IG4
- NHBC Chapter 6.7 Clauses D7 & M7
- Zurich New Build Guarantee Ref 2.58

FRAME COATING SYSTEM SUITABILITY

In general paints and stains do not adhere well to silicone sealants and will show signs of distress within a short period of time. Butyl 66 glazing compound can be over painted after skin formation, typically after 7-14 days. Painting will extend its service life.

MAINTENANCE

Regular maintenance of the frame is essential to ensure maximum performance of the glazing system and double glazed unit.

SPECIFICATION CLAUSE

Hodgson B5 Moisture Vapour Permeable (MVP) Glazing System Glazed In Accordance With The Method Statement For The B5 Glazing System.

Hodgson Sealants Limited
Belprin Road, Beverley, East Yorkshire, HU17 0LN, United Kingdom
T: +44 (0)1482 868321
F: +44 (0)1482 870729
W: www.hodgsonsealants.com
E: sales@hodgsonsealants.com

Registered in England No. 2799221 | Registered Office. Belprin Road, Beverley, East Yorkshire, HU17 0LN, United Kingdom | VAT REG. No. GB 856 3436 07

FULLY BEDDED FRAMES

Hodgson

GLAZING SYSTEM B5 METHOD STATEMENT

MATERIALS REQUIRED

- Timber sealer
- Glazing blocks - distance, location and setting blocks
- Sheradised pins
- Butyl 66 Glazing Compound
- Silfix® U9 silicone sealant

USEFUL TOOLS & ACCESSORIES

- Hand held moisture meter
- Glazing shovel
- High powered skeleton gun
- Tooling block
- Glass cleaner

IMPORTANT

Before we look at the correct method for installing sealed units using the B5 Moisture Vapour Permeable Glazing System, it is essential that the following points be clearly understood with regard to Timber Sealer and distance pieces:-

TIMBER SEALER

It is a common misconception that provided the frame has received a base coat stain or primer, timber sealer will not be required. This is not the case. The purpose of applying timber sealer is to prevent the absorption of oils contained within the Butyl Compound into the timber rebate. If oil is lost into the timber, the Butyl Compound will no longer be able to accommodate stresses placed on the frame as a result of wind load or thermal movement and small cracks are likely to occur between the rebate and unit which can then allow the passage of water. The service life of the unit will be greatly increased therefore if Timber Sealer is used as indicated.

DISTANCE PIECES

Many instances of premature unit failure can be traced directly back to incorrect size selection or absence of distance pieces. Ideally they must have a thickness of 3mm.

MEASURING THE FRAME OPENING

In order to allow the unit to be fully bedded in glazing material, each frame opening must be measured, the unit size calculated and the minimum required edge clearance (3mm) taken into account as described below. Ensure that protective edge tapes do not overlap by more than 1mm onto the face of the glass.

CALCULATING THE UNIT SIZE

The spacer bar of the unit should ideally be at or slightly below the sightline. For units with 12mm depth of edge sealant and spacer bar, calculate the unit size as follows:-

Example: For 16mm upstand required glass size = tight rebate size minus 6mm. For larger upstands more than 6mm may be subtracted from the tight size.

PREPARATION

1. Check that the moisture content of the window does not exceed 17% as per NHBC Chapter 6.7.
2. Remove all beads from the window.
3. Remove all dust, grease and loose material from the rebate. Any moisture on the timber should be wiped off using a clean paper towel or other absorbent material to give a dry surface.
4. Check the condition of any primer or stain on the frame, especially the rebate and glazing surfaces of the beads. Any section which has been partially missed or is considerably weathered should be reprimed or stained before glazing.
5. Check that the unit fits into the frame and can be centralised when standing the unit on the setting blocks so that there is a 3mm edge clearance at the bottom of the unit. The spacer bar should ideally be level with the sightline or slightly below it.
6. The use of Timber Sealer is essential to assist proper performance of Butyl 66. Timber Sealer must be applied to all rebate surfaces which will come into contact with Butyl 66. Coat these surfaces and allow to dry before glazing.

PREPARATION OF THE DOUBLE GLAZED UNIT

1. Inspect the double glazed unit for obvious defects and wipe any dust or loose material off the unit. Cut away excess edge sealant from the face of the glass. If glazing laminated glass, ensure that protective foil is applied to all edges.

GLAZING OF FRAMES

1. All double glazed units must be positioned on setting blocks. If the window has an opening sash, each unit will need to have its weight supported by location blocks in addition to the setting blocks. The position of setting and locations blocks depends on the way the sash is hung. Check with the diagram below to select the correct position of location and setting blocks appropriate to the window to be glazed (see picture B).

Hodgson Sealants Limited Belprin Road, Beverley, East Yorkshire, HU17 0LN, United Kingdom
T: +44 (0)1482 868321 **F:** +44 (0)1482 870729
W: www.hodgsonsealants.com **E:** sales@hodgsonsealants.com

Registered in England No. 2799221 | Registered Office. Belprin Road, Beverley, East Yorkshire, HU17 0LN, United Kingdom | VAT REG. No. GB 856 3436 07

FULLY BEDDED FRAMES

Hodgson

GLAZING SYSTEM B5 METHOD STATEMENT

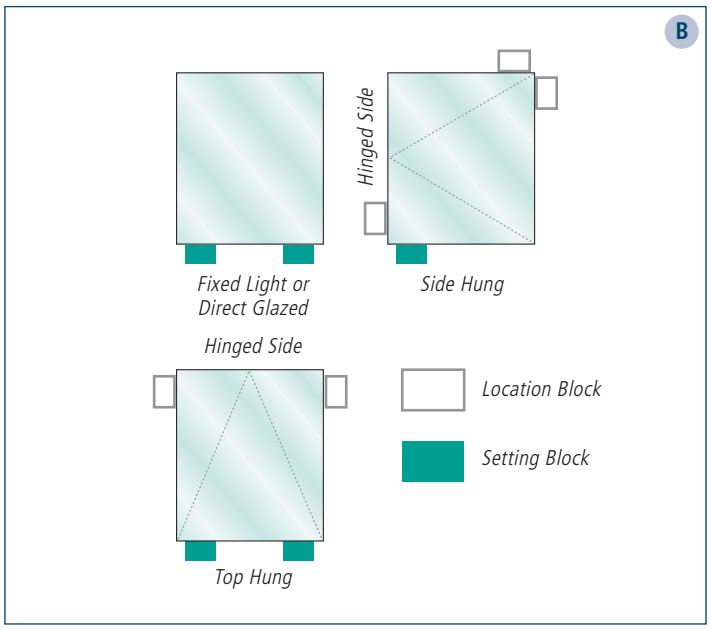

2. Apply Butyl 66 to the rebate and insert distance pieces (see picture C).

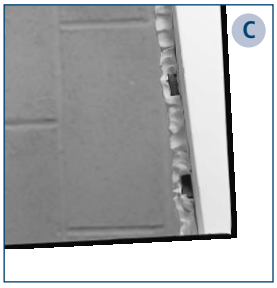

3. Position the setting blocks on the bottom rebate as near quarter points as possible as shown on picture B. Where more than one unit per window is to be glazed, start by glazing the bottom unit(s).

4. Position the bottom of the unit on the setting block(s). Using a glazing shovel inserted at the side of the unit to control and guide the unit, ease it back a little so that the unit can be centralised in the frame.

5. Press firmly all the way round the edge of the unit to engage the distance pieces so as to give a minimum 3mm thickness of compound.

6. If you are glazing an opening sash, insert location blocks around the sides and top of the units as shown in Picture B.

7. Apply Silfix® U9 around the edge of the unit to completely fill the perimeter void, finishing with a fillet to bed the bead to the unit and the platform.

8. Position the distance pieces opposite those in the back bedding (see picture E). Bed the bottom bead onto the fillet of Silfix® U9 and push towards the unit to engage the distance pieces so as to give a minimum 3mm thickness of silicone.

9. It is advisable to use shorter pins when pinning beads to the midrails found on some horizontal and all bar windows styles. Position the pins at right angles to the surface of the bead. They should be no more than 50mm from either end and not more than 150mm apart. There should always be at least two pins for every bead. Position and pin the two side beads and top bead.

10. Apply Silfix® U9 to fill up the front bedding to the sightline, finishing with a slope away from the glass (see picture F).

11. Tool the internal and external bedding to a chamfer to assist in the shedding of water. A good result can be achieved with Silfix® U9 by using a tooling block together with a fine water spray (see picture G).

FRAME DECORATION & MAINTENANCE

In general paints and stains do not adhere well to silicone sealants. Regular maintenance of the frame is essential to ensure maximum performance of the glazing system and double glazed unit.

Hodgson Sealants Limited Belprin Road, Beverley, East Yorkshire, HU17 0LN, United Kingdom
T: +44 (0)1482 868321
F: +44 (0)1482 870729
W: www.hodgsonsealants.com
E: sales@hodgsonsealants.com

Registered in England No. 2799221 | Registered Office. Belprin Road, Beverley, East Yorkshire, HU17 0LN, United Kingdom | VAT REG. No. GB 856 3436 07